PASADENA PUBLIC LIBRARY
POLICY GOVERNING PUBLIC USE OF EXHIBIT SPACES

The Pasadena Public Library is an information center for the community and encourages the free expression of ideas essential to an informed citizenry. To accomplish this role, the first objective of the library is to serve as an active resource for learning, studying and contemplating ideas. This objective is evidenced by, but not limited to, the basic functions of libraries in checking out books and other material as well as the offering of programs and services which advance the knowledge and experience of the citizens we serve. The offering of exhibit space in the library is one method used to foster greater free expression and free access to ideas representing various points of view on diverse subjects.

I. Statement of Purpose

A. Exhibit spaces aid library patrons in the pursuit of education, research, and recreation, and support the cultural and civic activities of the larger community through the following goals:

1. Presentation of books, visual arts, crafts, paintings, and drawings, sculpture, and a variety of media.
2. Promotion of interest in the use of books and other library resources.
3. Information about community affairs, organizations, services and activities.

II. Stipulations for Use of Library Exhibit Space

A. Exhibit space is available to individuals and groups within the community on an equitable basis.

B. The library reserves the right to preempt any exhibit for a library or City-sponsored event or exhibit; in such instances, the library will put forth reasonable effort to give ample advance notice of such preemption and to assist the group in reserving another date or exhibit case.

C. The library does not necessarily endorse the beliefs or viewpoints of topics which may be the subject of library exhibits, whether library-initiated or sponsored by an individual or group from within the community. A disclaimer to this effect will be placed in each exhibit case.

D. Exhibits may not include defaming or obscene materials as defined by the United States Supreme Court or material which could lead to a breach of peace or which advocate the violation of state criminal laws.

E. It is not the intent that this space be used as advertising space for commercial enterprises or political candidates.

III. Exhibit Space Available For Use

A. Central Library makes exhibit cases available to groups and individuals for public use.

4. The following cases may be used for exhibits:

· Business Wing	2 cases
· Centennial Room	2 cases
· Humanities Wing	2 cases
· Main Hall	2 cases
· North Entrance	2 cases

5. The Main Hall cases (west end) will be used for topics of interest to children.
6. Displays in the North Entrance and freestanding displays in the Main Hall will include information on library and City programs and services as well as artistic displays (arts and crafts, paintings and drawings, sculpture, and a variety of media) of broad popular interest.
7. The exhibit cases in the Centennial Room are for the purpose of displaying local history of displays of a historical nature, when available.
8. The exhibit cases in the Business and Humanities Wings may be used for information about community affairs, organizations, services, activities, and current events reflecting on our life and times. These cases may also be used as additional space for large North Entrance, Centennial Room, or Main Hall exhibits.

B. The Central Library has open space in the Main Hall for freestanding exhibits.

1. Open space in the Main Hall may be used for freestanding exhibits with the approval of the Library Director, represented by the Executive Secretary. At times, scheduled events or maintenance may preclude the availability of open space.
2. Items may be displayed on the library's stanchions or freestanding display boards by prior arrangement. If exhibitors provide their own display surfaces, prior approval must be obtained. Exhibit stands must be clean, neat and must not present a hazard.

C. The Children's Room and the Branch Libraries have exhibit cases, bulletin boards, and display space. Exhibits in these locations are the responsibility of the Site Supervisor and are prepared or solicited by library staff at each site.

IV. Application For Use

A. A fully completed, signed, *Application To Use Pasadena Public Library Exhibit Space* should be submitted by all exhibitors at least one month in advance of use to the Executive Secretary for Library Director's approval.

B. The Library Director's office of the Library shall provide an application which includes, but is not limited to:

1. Name of group or individual, contact person, address, telephone number.
2. Written description of the purpose and nature of the exhibit and types of material to be exhibited, titles of books if relevant.
3. Monetary value of the work to be exhibited if applicable.
4. Information regarding the exhibitor's insurance policy.
5. The dates and cases or space requested for the exhibit.
6. A description of any publicity or media contacts that will be initiated by the exhibitor.

C. The scheduling of exhibits is at the discretion of the Library Director.

1. Applications will be processed on a first-come/first-served basis, with scheduling priority given to Pasadena-based exhibitors and exhibitors who have not previously presented an exhibit. Exhibit quality shall also be considered.
2. The schedule of exhibits after deadline is at the discretion of the Library Director.
3. Exhibits representing an "opposing viewpoint" to a previous exhibit will be given priority scheduling when possible in order to present a broad spectrum of opinion on a variety of subjects.

D. Use of library exhibit space will be limited to the type of exhibit stated on the approved application. The Executive Secretary shall be notified of any changes in the type of exhibit schedules two weeks in advance.

E. The Executive Secretary will review all exhibit applications to ensure compliance with this policy. Exhibits will be reviewed following installation to verify compliance.

F. Applicants whose applications for use are not approved will receive a letter stating the reasons for the denial. An applicant may appeal such disapproval to the Library Director.

V. Exhibitor's Guidelines

A. The library strives to present museum-quality exhibits at all times. The Library Director or delegate may advise exhibitors on layout and signage for exhibits.

B. Labels for exhibits must be furnished by the exhibitor. In all exhibit situations, lettering for signage or textural information should be neat, clear and articulately stated, striving for a museum-quality look. Labels must not be taped to walls or exhibit cases. Prices may not be included on labels or anywhere in the exhibit.

C. The exhibitor's name and telephone number may be posted in the exhibit.

D. Printed publicity initiated by the exhibitor must be submitted to and approved by the Library Director or delegates well in advance of publication. Flyers and media contacts may also be initiated by the library.

E. The exhibitor assumes total responsibility for the transportation of all work to and from the library.

F. The exhibitor is responsible for the installation and dismantling of the exhibit as scheduled. If the library must dismantle an exhibit because it is not removed as scheduled, the library is not responsible for any damages and the exhibitor may be billed for staff time.

VI. Liability

A. The exhibit cases must be left in satisfactory condition. Exhibitors using exhibit cases or exhibit space assume liability and shall be liable for any damage resulting from said usage, as assessed by the City.

B. Neither the library nor the City assumes responsibility for materials, equipment or any other article left by any organization, group or individual in the library and will not be liable for loss, theft or damage thereto.

C. The library will dispose of abandoned exhibit materials after reasonable effort has been made to contact the exhibitor.

Attachments*: Application for Use
Guidelines for Exhibitors
Exhibit Case Map
Procedure for Use of Public Exhibit Space

Responsible for Implementation: Executive Secretary, Administration Office.

**Applications and complete exhibit packets may be obtained through the Administrative Services Division by calling Debi Humphrey at (626) 744-4062.*
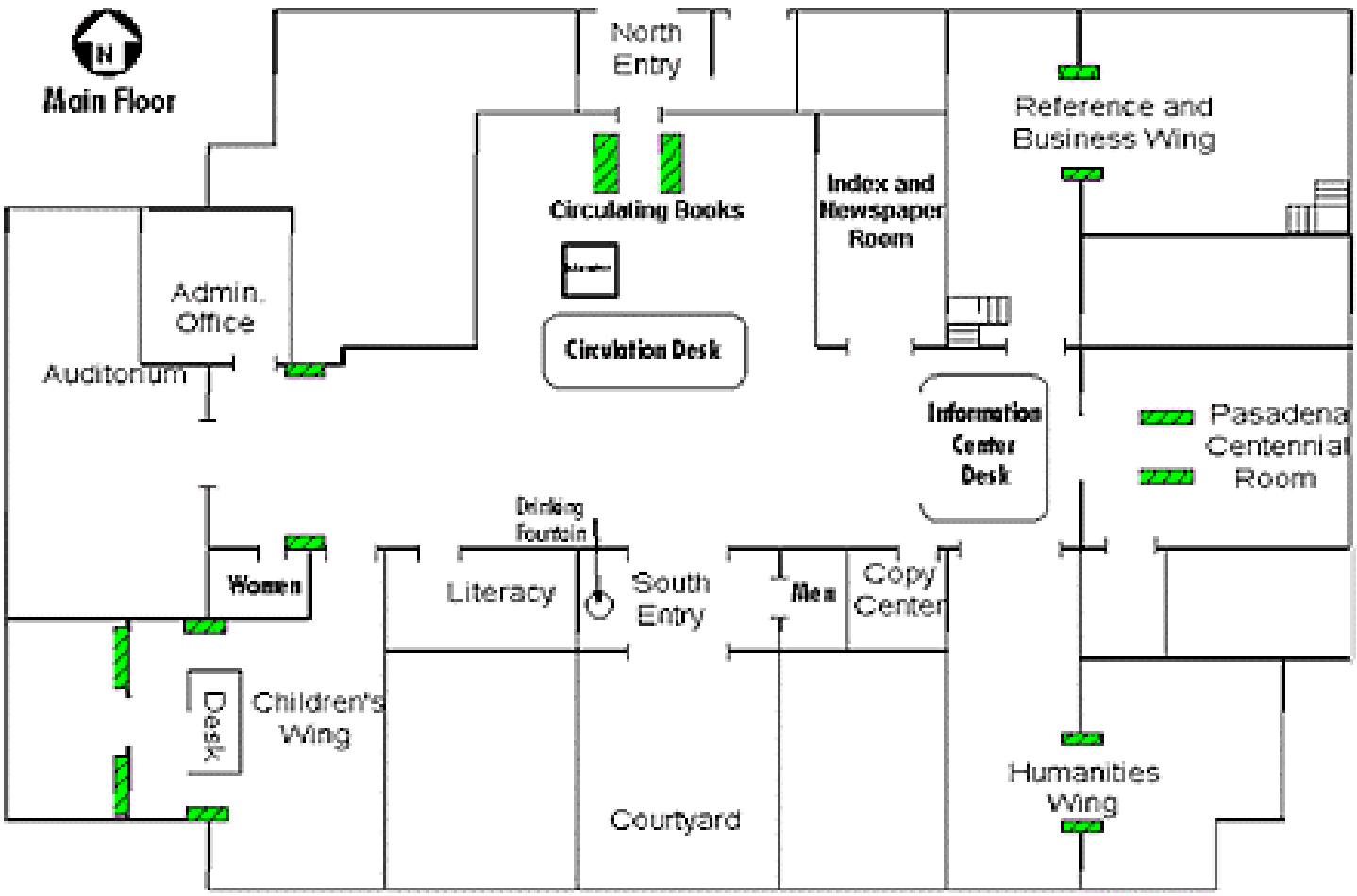
Exhibit Case Location